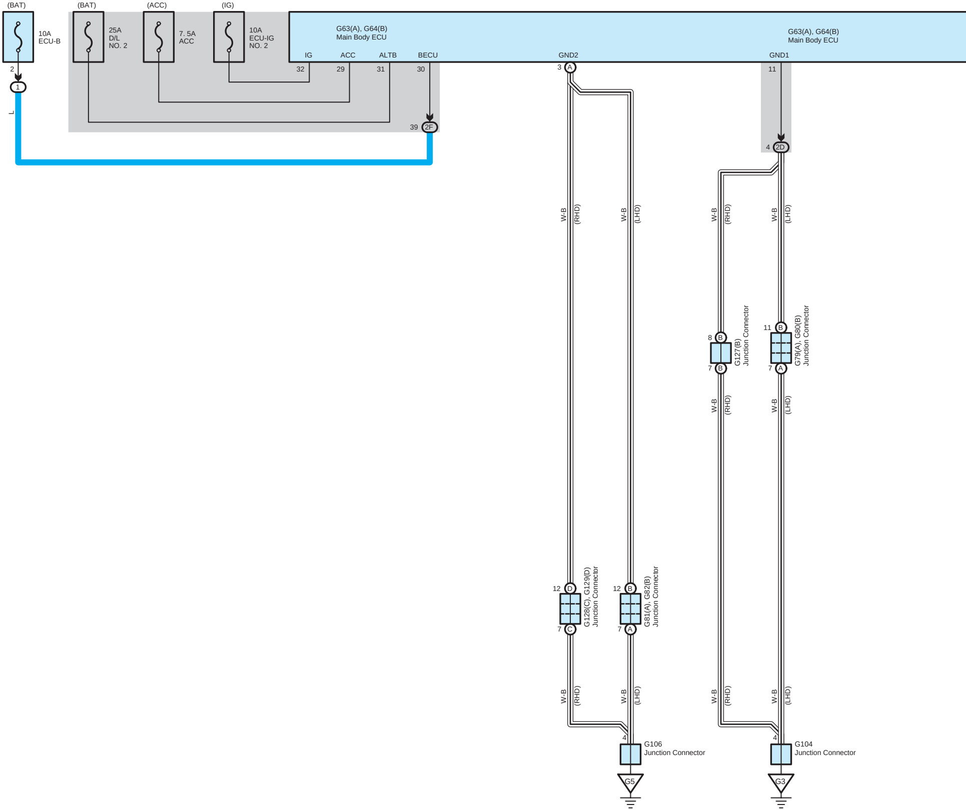
(BAT)
10A
ECU-B
2
1
L
(BAT)
25A
D/L
NO. 2
(ACC)
7. 5A
ACC
(IG)
10A
ECU-IG
NO. 2
G63(A), G64(B)
Main Body ECU
IG
ACC
ALTB
BECU
32
29
31
30
39
2F
GND2
3
A
G63(A), G64(B)
Main Body ECU
GND1
11
4
2D
W-B
(RHD)
W-B
(LHD)
W-B
(RHD)
W-B
(LHD)
8
B
7
B
G127(B)
Junction Connector
11
B
7
A
G79(A), G80(B)
Junction Connector
W-B
(RHD)
W-B
(LHD)
12
D
7
C
G128(C), G129(D)
Junction Connector
12
B
7
A
G81(A), G82(B)
Junction Connector
W-B
(RHD)
W-B
(LHD)
W-B
(RHD)
W-B
(LHD)
4
G106
Junction Connector
G5
4
G104
Junction Connector
G3

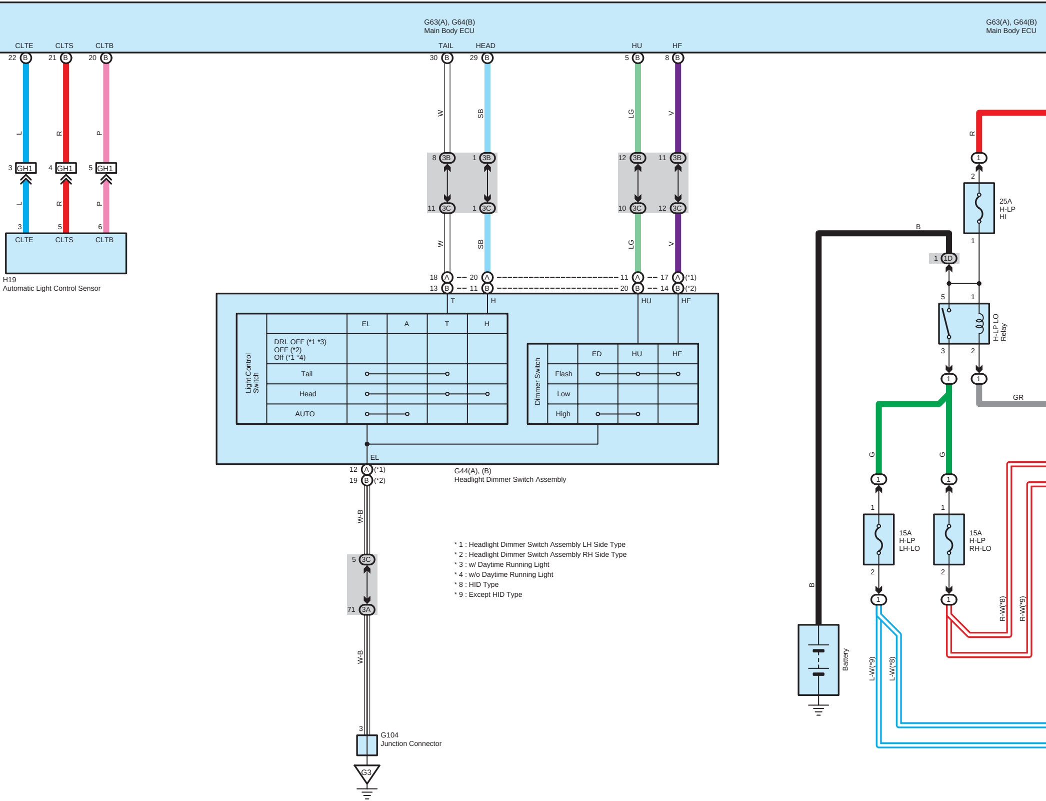
G63(A), G64(B)
Main Body ECU
G63(A), G64(B)
Main Body ECU
CLTE
CLTS
CLTB
TAIL
HEAD
HU
HF
22
B
21
B
20
B
30
B
29
B
5
B
8
B
L
R
P
W
SB
LG
V
3
GH1
4
GH1
5
GH1
3
5
6
CLTE
CLTS
CLTB
H19
Automatic Light Control Sensor
8
3B
1
3B
12
3B
11
3B
11
3C
1
3C
10
3C
12
3C
18
A
20
A
11
A
17
A
(*1)
13
B
11
B
20
B
14
B
(*2)
T
H
HU
HF
Light Control Switch
Dimmer Switch
EL
12
A
(*1)
19
B
(*2)
G44(A), (B)
Headlight Dimmer Switch Assembly
W-B
5
3C
71
3A
3
G104
Junction Connector
G3
R
1
2
25A
H-LP
HI
1
B
1
1D
5
1
H-LP LO Relay
3
2
1
1
GR
G
G
1
1
1
1
15A
H-LP
LH-LO
15A
H-LP
RH-LO
2
2
1
1
B
Battery
L-W(*9)
L-W(*8)
R-W(*8)
R-W(*9)

Light Control Switch

| | EL | A | T | H |
|---|---|---|---|---|
| DRL OFF (*1 *3)<br>OFF (*2)<br>Off (*1 *4) | | | | |
| Tail | ○ | | ○ | |
| Head | ○ | | ○ | ○ |
| AUTO | ○ | ○ | | |

Dimmer Switch

| | ED | HU | HF |
|---|---|---|---|
| Flash | ○ | ○ | ○ |
| Low | | | |
| High | ○ | ○ | |

* 1 : Headlight Dimmer Switch Assembly LH Side Type
* 2 : Headlight Dimmer Switch Assembly RH Side Type
* 3 : w/ Daytime Running Light
* 4 : w/o Daytime Running Light
* 8 : HID Type
* 9 : Except HID Type

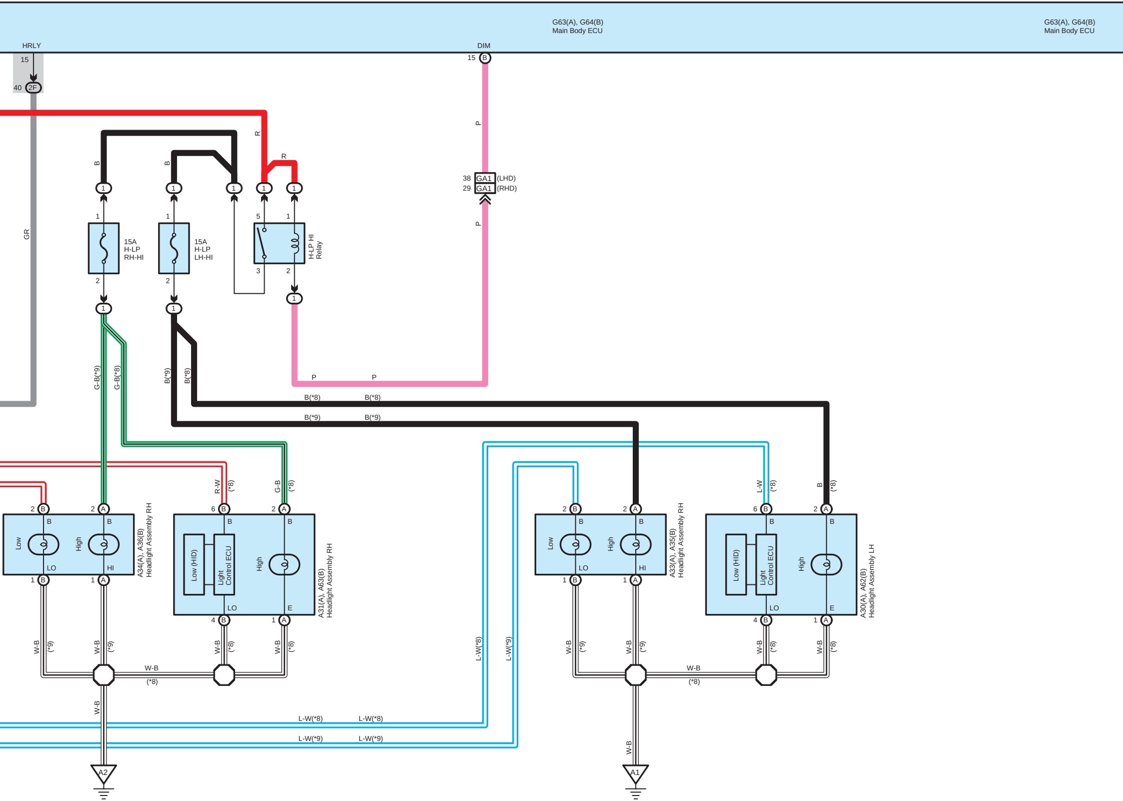
G63(A), G64(B)
Main Body ECU
G63(A), G64(B)
Main Body ECU
HRLY
15
40
2F
DIM
15
B
GR
R
R
B
B
P
38 GA1 (LHD)
29 GA1 (RHD)
P
15A
H-LP
RH-HI
15A
H-LP
LH-HI
H-LP HI
Relay
1
2
5
3
1
2
P
P
G-B(*9)
G-B(*8)
B(*9)
B(*8)
B(*8)
B(*8)
B(*9)
B(*9)
R-W
(*8)
G-B
(*8)
L-W
(*8)
B
(*8)
Low
High
LO
HI
A34(A), A36(B)
Headlight Assembly RH
Low (HID)
Light Control ECU
High
LO
E
A31(A), A63(B)
Headlight Assembly RH
Low
High
LO
HI
A33(A), A35(B)
Headlight Assembly RH
Low (HID)
Light Control ECU
High
LO
E
A30(A), A62(B)
Headlight Assembly LH
W-B
(*9)
W-B
(*8)
L-W(*8)
L-W(*9)
L-W(*8)
L-W(*8)
L-W(*9)
L-W(*9)
A2
A1

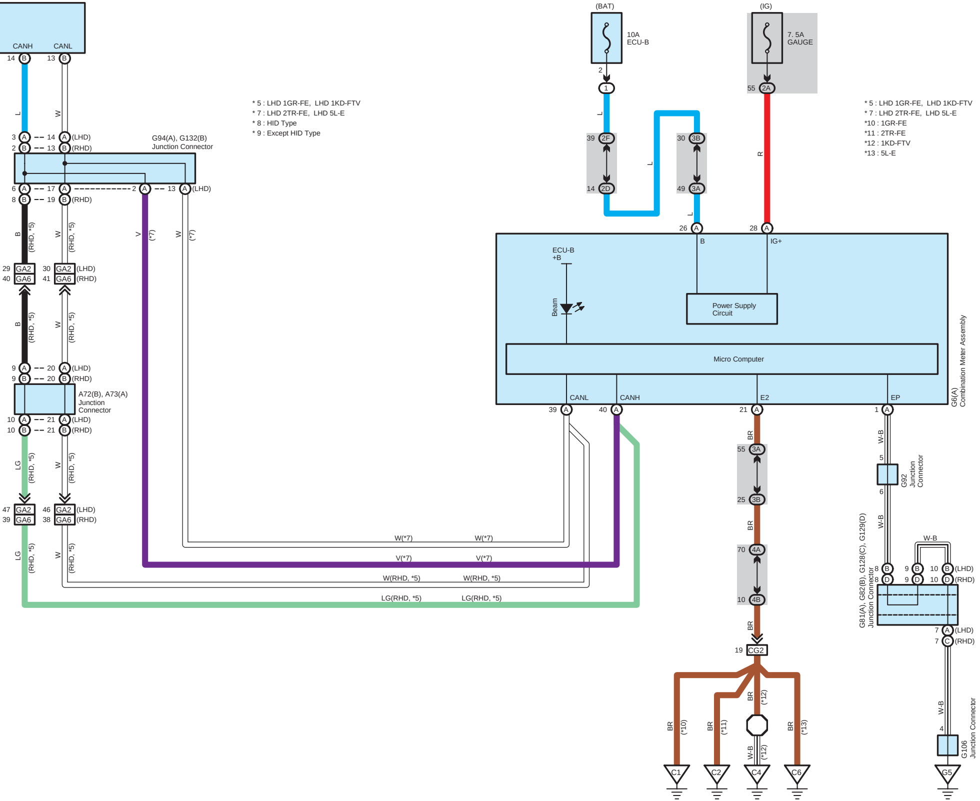

* 5 : LHD 1GR-FE, LHD 1KD-FTV
* 7 : LHD 2TR-FE, LHD 5L-E
* 8 : HID Type
* 9 : Except HID Type

* 5 : LHD 1GR-FE, LHD 1KD-FTV
* 7 : LHD 2TR-FE, LHD 5L-E
*10 : 1GR-FE
*11 : 2TR-FE
*12 : 1KD-FTV
*13 : 5L-E

CANH
CANL
G94(A), G132(B)
Junction Connector
A72(B), A73(A)
Junction
Connector
(LHD)
(RHD)
(BAT)
10A
ECU-B
(IG)
7. 5A
GAUGE
ECU-B
+B
Beam
B
IG+
Power Supply
Circuit
Micro Computer
CANL
CANH
E2
EP
G6(A)
Combination Meter Assembly
G92
Junction
Connector
G81(A), G82(B), G128(C), G129(D)
Junction Connector
G106
Junction Connector
W(*7)
V(*7)
W(RHD, *5)
LG(RHD, *5)
GA2
GA6
CG2
C1
C2
C4
C6
G5
W-B
BR
L
R